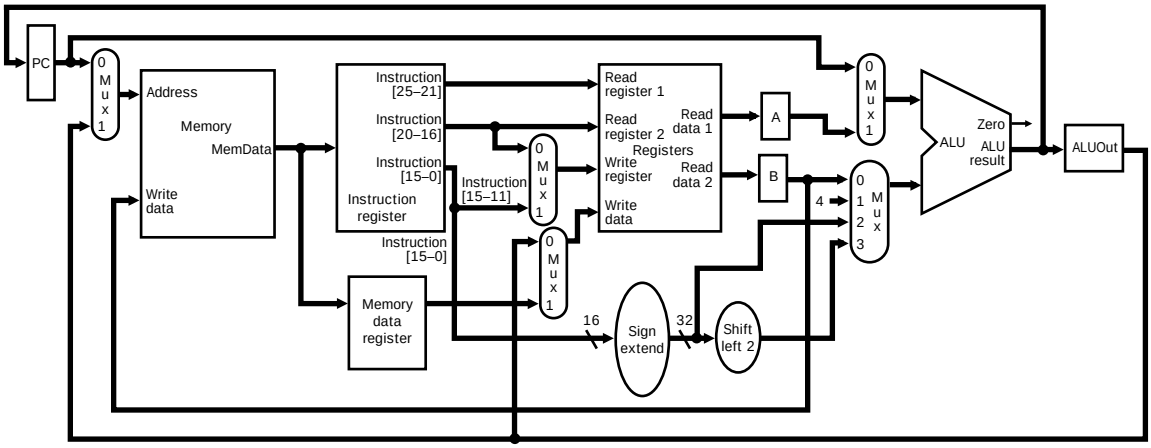

97108/Patterson
Figure 05.31